DS1900 Information Sheet for Builders and Architects

FIRE BY escea.

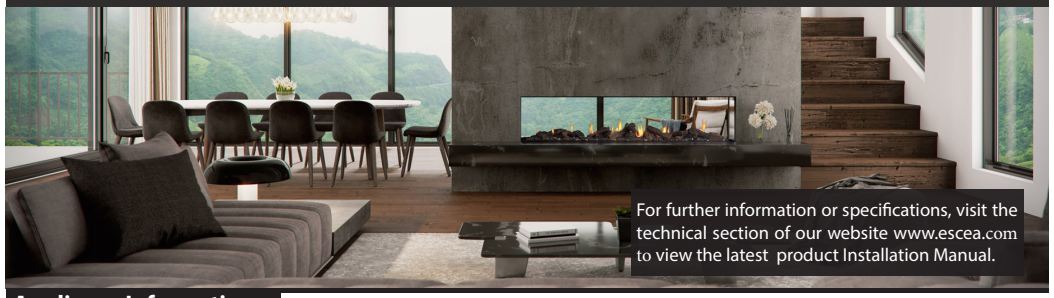

Appliance Information

Specifications

Heat Output	10.5 kW*
Star Rating	3 star*
Gas Input / Consumption	49 MJ/hr
Gas Connection	Lower centre of appliance, 1/2" BSP
Gas Type	Natural Gas / ULPG (NZ)/ Propane (Aus)
Power Requirement	3 pin earthed 230V power outlet to be within 1.0m of right side of the appliance.
Appliance Weight	160kg

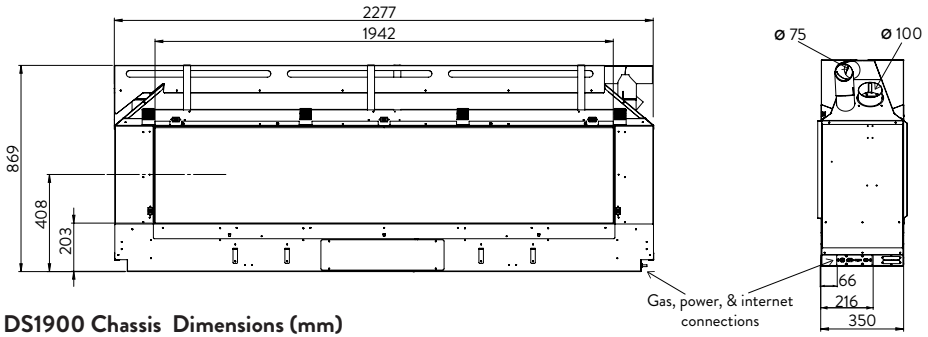

DS1900 Chassis Dimensions (mm)

**May vary with flue type and fireplace configuration.*

Cavity Construction

Minimum Timber Framing Dimensions (mm)

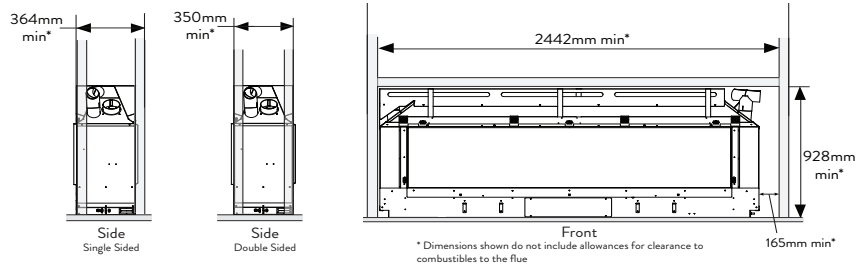

Note: These are minimum cavity framing dimensions and may not achieve a centred fireplace design in all specifications. Please adjust overall cavity size if required.

Note: For masonry installations, clearance will be slightlylarger to allow access to the electrical and gas connections. Please contact the Escea advisory team at aa@escea.com.

Wall Lining Dimensions

Minimum Wall lining Dimensions (mm)

The appliance must be installed prior to and behind the finished wall surface. Take into account any plaster board, tiles or any other finishing surface that may be intended for the finished wall surface.

Wall finishing materials must not encroach upon the minimum cavity clearances shown.

The wall board that lines the outside of the opening can be normal 13mm plaster board and does not need to be non-combustible.

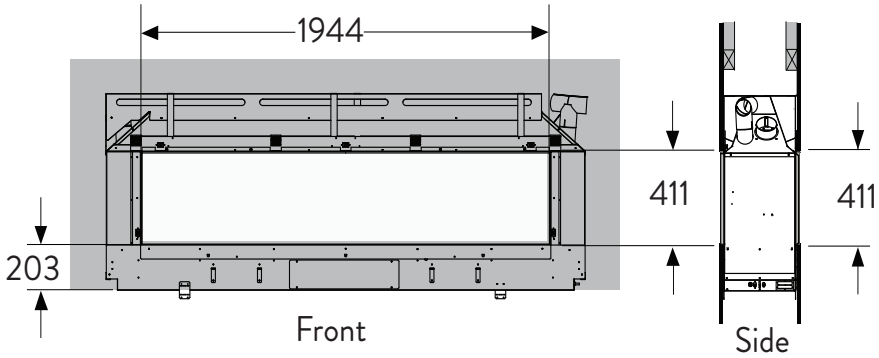

Frameless Finishing

Finishing Detail

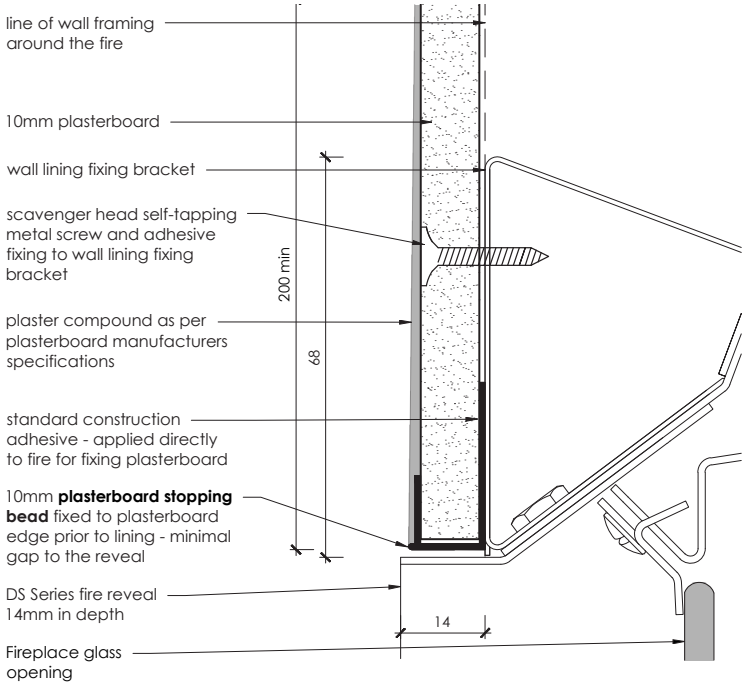

Flue Information

Flue Configuration (If less than 8m flue length is required)

If your flue system is less than 8m long (as shown in diagrams below), then a simple aluminium flexible flue is required.

If your flue system is greater than 8m long (up to 40m long), then please contact the Escea Advisory Team at aa@escea.com for further guidelines.

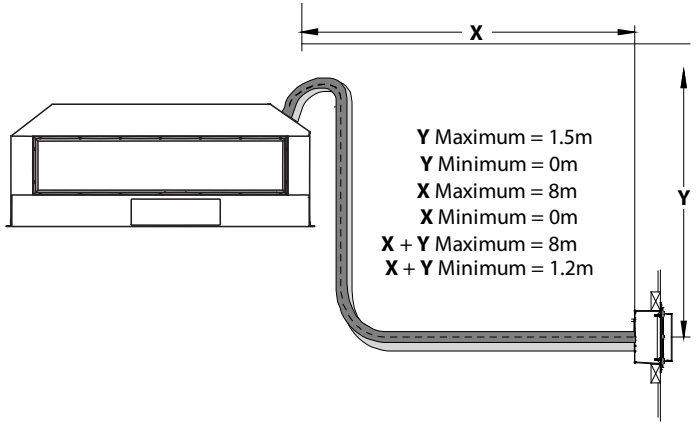

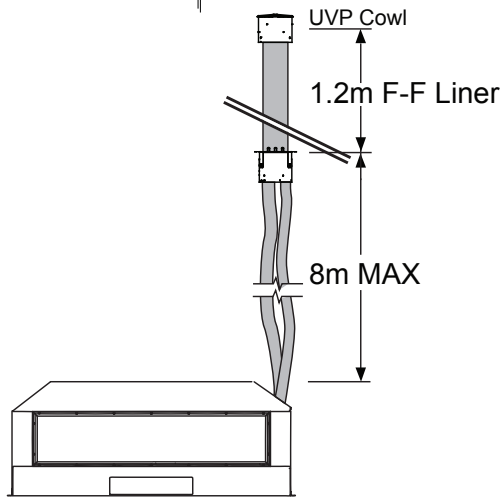

Internal

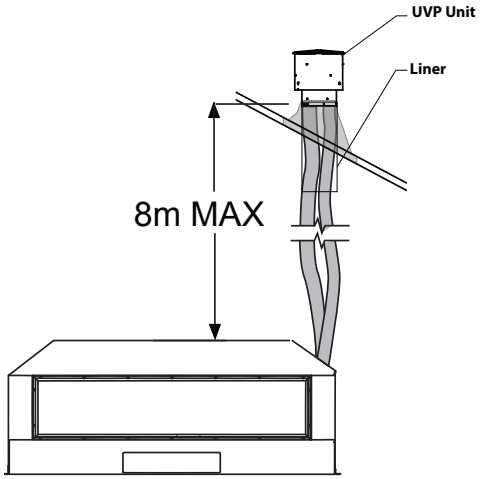

External

Clearances

Chassis and Flue Clearance

NOTE: Termination of Flue MUST be greater than or equal to 1.2 meters.
The fire chassis is zero clearance rated.
A 50mm clearance must be maintained from the exhaust flue for the first 1.2m of flexi flue from the appliance (see diagram below).

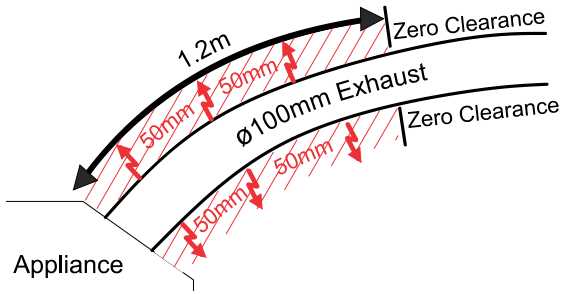

Television Clearances

The diagram (shown right) shows the recommended minimum clearances for the location of any electrical equipment (such as Plasma TV, LCD TV or home theatre) above a DS gas fire.
A mantel/recess is not required to comply with our recommendation of TV installation.

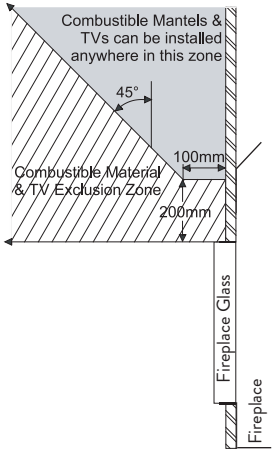

Note: dimensions from the top edge of the glass frame.

Note: The television clearance recommendations below are to be treated as a suggestion of a suitable installation only. It is the responsibility of the end user to check the installation instructions of their electrical appliances to ensure that the location in relation to the gas fire is suitable. Escea in no way guarantees or takes responsibility that the above installation suggestion will be suitable for all electrical or home entertainment appliances.

Mantel Clearance

Please refer to the diagram. Mantels or protruding ledges above the heater must not be installed lower than the dimension shown.
Note: dimension from the top edge of the glass frame.

Cavity Base

This appliance MUST be fully supported on its base, over the entire area of the underside of the appliance. The base must also be level and strong enough to support the total product weight, which is approximately **160kg**.

The fireplace can be recessed into the ground but must maintain clearances detailed in the diagram shown right for any combustible flooring materials.
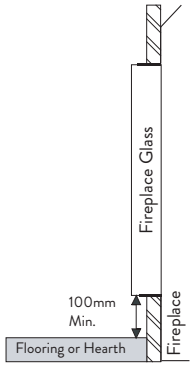
The fireplace must be seismically restrained in a manner appropriate to the installation location.